Sonaer Proprietary Information - The information provided on this drawing is of confidential nature and is property of Sonaer, Inc.
and is not to be distribued, discussed, or photocopied to any third party without explicit written consent from Sonaer, Inc.
All violators, if found by any source, will be prosecuted to the fullest extent of the law.

REV	DESCRIPTION	DATE

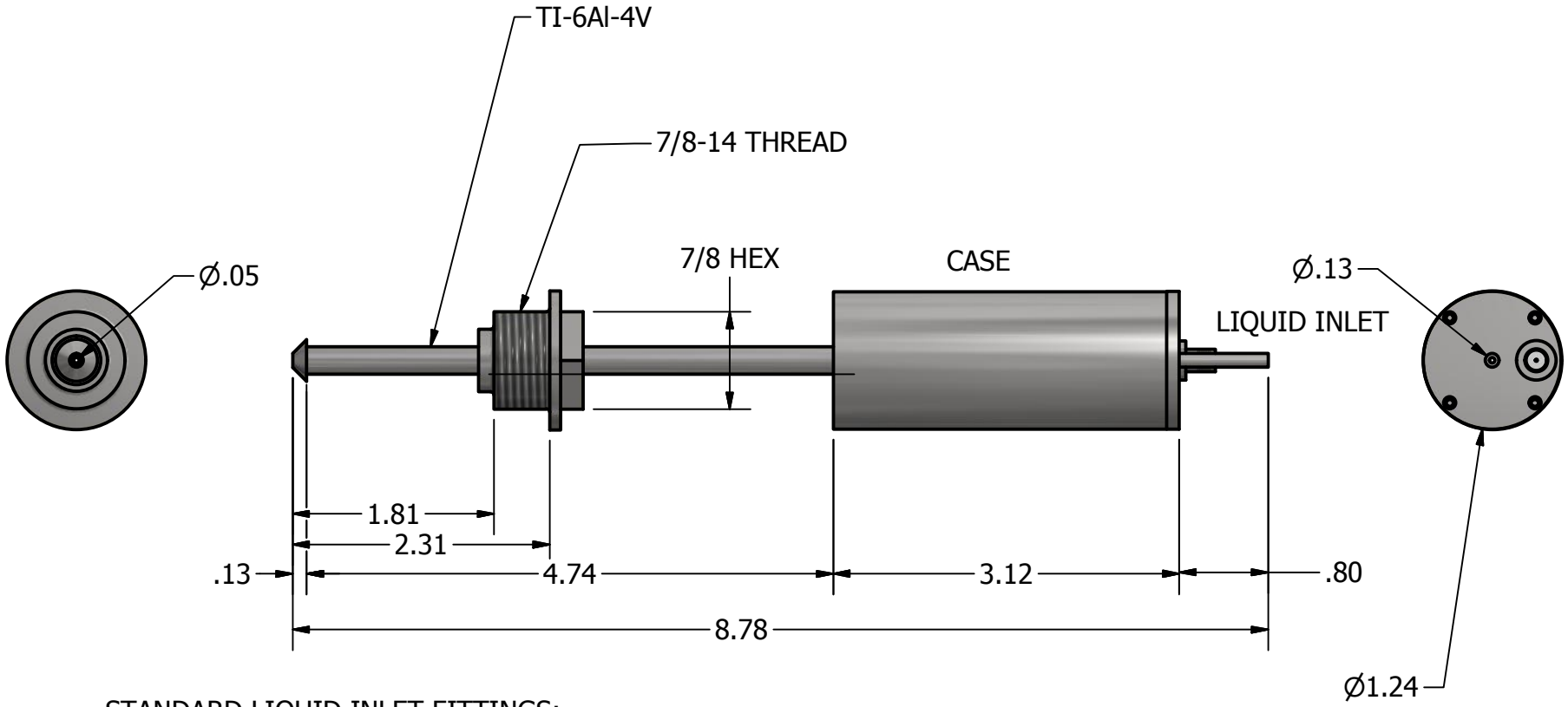

STANDARD LIQUID INLET FITTINGS:
Push-To-Connect:
PC-1/8 IN PB, BLACK NYLON, OR
Ni-PLATED BRASS

OTHER AVAILABLE LIQUID INLET
FITTINGS:
Compression: Stainless Steel
IDEX18-18
IDEX116-18
CF18-18
CF116-18

ITEM NO.	PART NUMBER:	DESCRIPTION:	MATERIAL SPECS:	QTY:

PARTS LIST

UNLESS OTHERWISE SPECIFIED
ALL DRAWING UNITS ARE IN INCHES
TOLERANCES ARE:
FRACTIONS DECIMALS ANGLES

CAD GENERATED DRAWING
DO NOT MANUALLY UPDATE

APPROVALS	DATE
JB	07-15-14

MATERIAL:

FINISH:

SONAER INC.

PART NAME:

HTWS30

SIZE | DRAWING NO.: | REV:

SCALE: 1:1.5 | CAD FILE: | SHEET